NO.	COMPONENTS	MATERIALS	SPECIFICATION:FINISH/COLOR	QTY.
1	ACTUATOR	GLASS FILLED PA9T, UL94V-0	BLACK	1
2	HOUSING	GLASS FILLED LCP, UL94V-0	NATURAL	1
3	ANCHOR-PLATE	BRASS, T=0.20mm	SURFACE PLATING:2~5 μm Sn UNDER PLATING:1~3 μm Ni	2
4	CONTACT	PHOSPHOR BRONZE, T=0.20mm	SURFACE PLATING:SEE "NOTE" UNDER PLATING:1~3 μm Ni	N

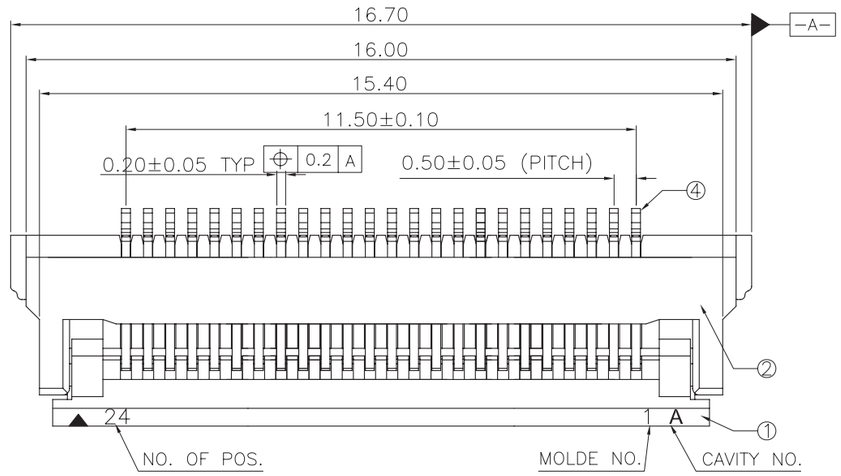

NOTE:
1.ALL MATERIAL MUST BE COMPLY WITH GGP-001/SS-00259/RoHS.
2.PART NO. LEGEND:
F315-1A7D1-110XX

- NO. OF POSITIONS
- 7D:PHOSPHOR BRONZE 0.05um MIN Au OVER ALL
- 7A:PHOSPHOR BRONZE 2~5um Sn
- 1A:LCP NATURAL

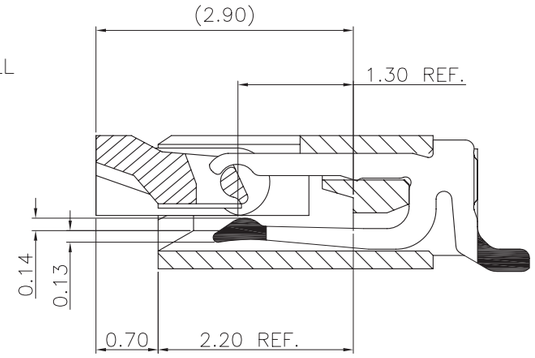

SECTION A-A
SCALE 2:1

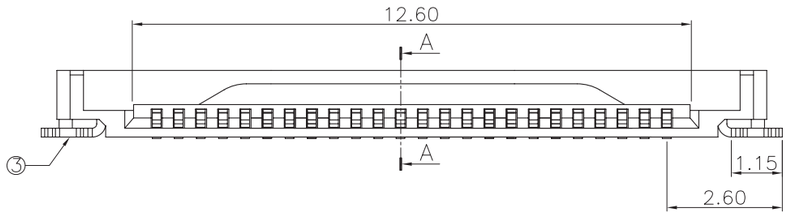

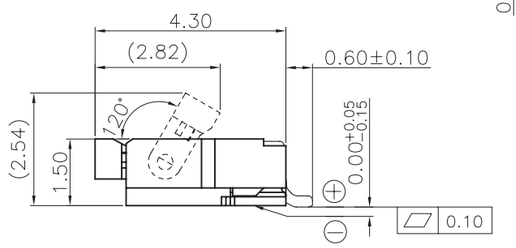

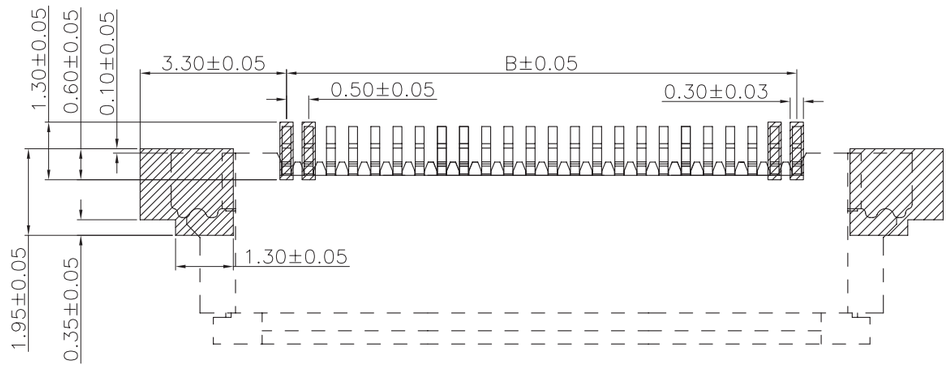

RECOMMEND PCB LAYOUT SIZE

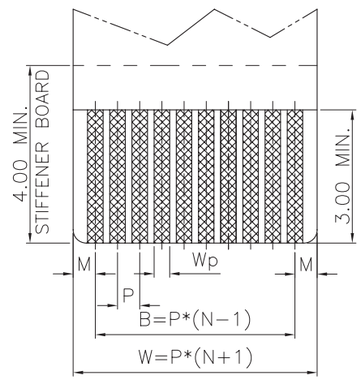

APPLICABLE FPC/FFC DIMENSION
THICKESS:T=0.30±0.05

APPLICABLE FPC

	FPC	
	1	2
M	0.5±0.05	0.5±0.05
P	0.5±0.03	0.5±0.03
B	B±0.05	B±0.05
W	W±0.07	W±0.07
Wp	0.35±0.03	0.30±0.05

	DATE	ECR
△		
△		
△		
△		
△		

CHAMPWAY 冠泰電子有限公司
CHAMPWAY ELECTRONICS CO., LTD.

PART NAME: FPC/FFC PH0.50 H1.50mm CONN. ZIF R/A FLIP SMT

PART NUMBER: F315-1A7D1-11024

S/C NO

APPROVAL	CHECKED	DRAWING	DRAWING NO	DATE	REV	SCALE	UNIT	NO.
Roy	Zhengxian.ye	Henry	A-S0057	121125	A	/	mm	1/1

TOLERANCE:

X.	±0.50	X.°	±4°
.X	±0.30	.X°	±3°
.XX	±0.20		
.XXX	±0.10		