RevNo	Revision note	Date	Signature

NOTE

1. RATING : DC 12V 50mA Max
2. CONTACT RESISTANCE : 100mΩMAX
3. GENERAL TOLERANCE : +/- 0.2 mm
4. MANUFACTURING SPECIFCATION
   WOULD BE ACCORDANCE WITH WT0158
5. PART NO.(P/N.):

TS405V1M - 006 * R - R

- TS405V1M: 3.4X2.6 VERTICAL SMD
- 006: DIMENSION "H" 006=0.65 mm
- *: Force B=160gf P=240gf M=300gf
- R: Lead Free
- R: PACKING R=REEL

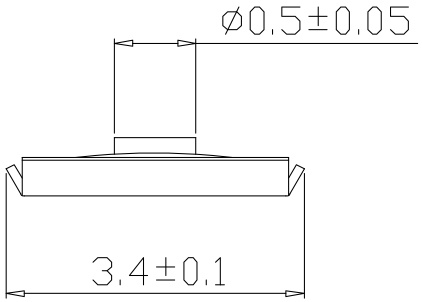

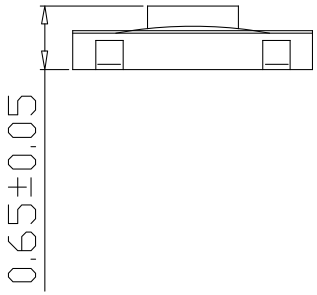

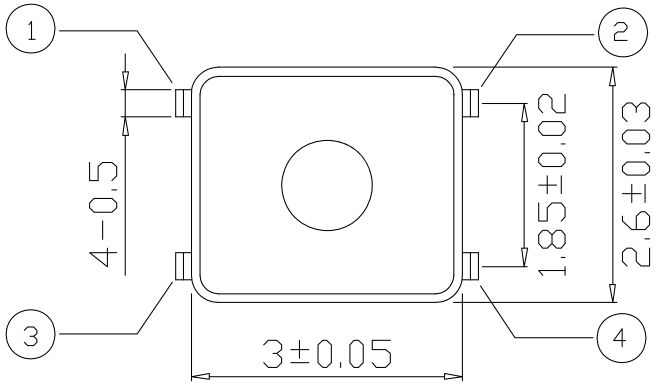

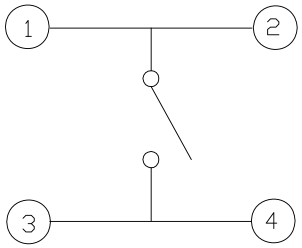

CIRCUIT DIAGRAM

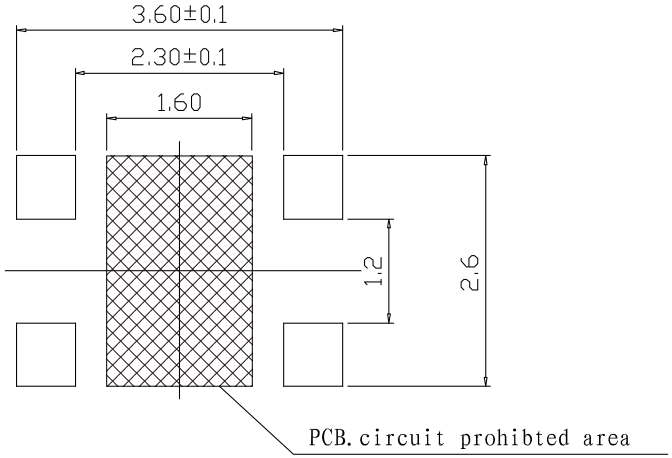

P.C.B LAND DIMENSION

Designed by L.Y.D		CHAMPWAY 冠泰電子有限公司 CHAMPWAY ELECTRONICS CO., LTD.	
Checked by			
Approved by	Unit mm	Scale 1/1	Date 2011.10.14
Item Tactile Switch	Tool A-Cad	Sheet 1/1	Rev. 0
Model 3.4 X 2.6 SMD	Drawing name TS405V1M- 006 * R- R		