1. MECHANICAL DIMENSIONS :

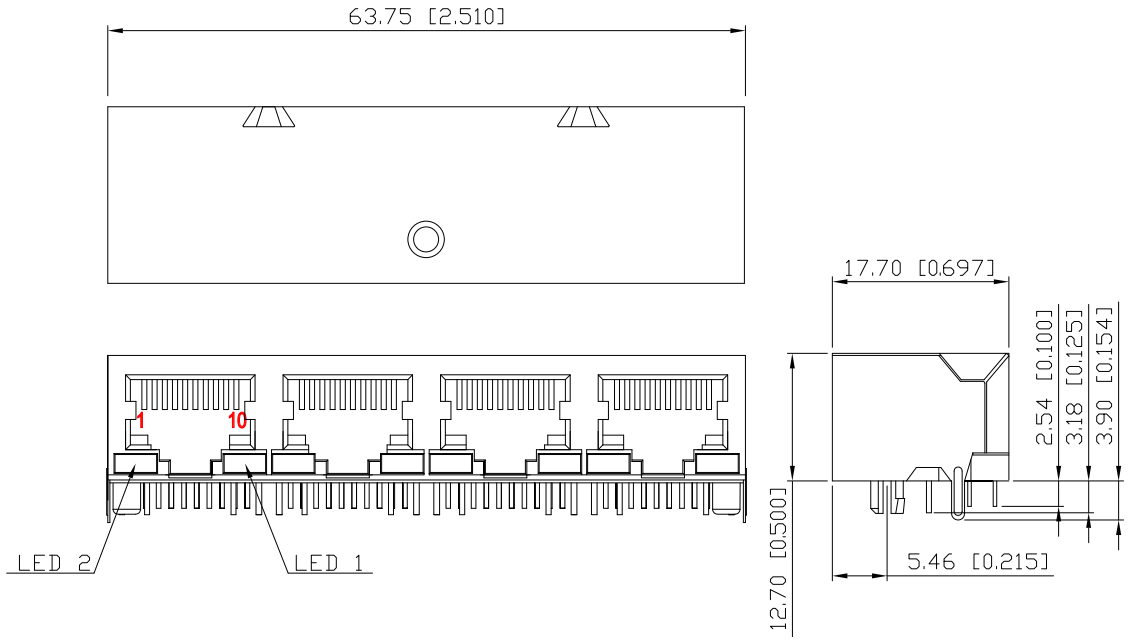

NOTES:
1. MATERIAL:
   HOUSING: HIGH THERMOPLASTIC, UL94V-0, BLACK
   CONTACTS: PHOS-BRONZE,
   3u" GOLD PLATING ON CONTACT AREA,
   NICKEL UNDERPLATING OVERALL
   SHIELD: COPPER ALLOY, NICKEL PLATING
2. OPERATING TEMPERATURE: -40°C~+85°C
3. MATING FORCE: 4 POUNDS MAX.
   UNMATING FORCE: 4 POUNDS MAX.
4. DURABILITY: 750 MATING CYCLED MIN.
5. CAVITY CONFORMS TO FCC RULES
   AND REGULATIONS PART 68, SUBPART F.

PART NO. :

CWJ1400-S-B1L ＊

LED Color Options
＊=See Below Table

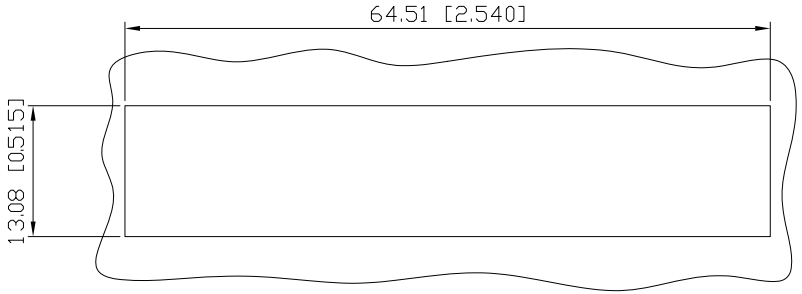

RECOMMENDED
PANEL CUTOUT DIMENSION

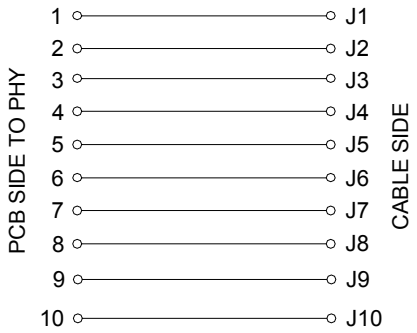

＊= LED Color Options Table

LED Color Options		LED DASH OPTION
LED 2 (Left)	LED 1 (Right)	
Yellow	Green	1
No LED	Green	2
Yellow	No LED	3
Green	Yellow	4
Green	Green	5
Yellow	Yellow	6
Orange/Green	Orange/Green	7
Yellow/Green	Yellow/Green	8
Orange/Green	Yellow	9

CHAMPWAY 冠泰電子有限公司
CHAMPWAY ELECTRONICS CO., LTD.

ZONE	REV.	DESCRIPTION	DATE	DWG.

FILE NO : CWJ1400 SERIES

TOLERANCE(公差) :
0.00 mm ± 0.25 mm
0.0 mm ± 0.30 mm

TITLE 圖 名	1X4 RJ45, 10P10C, Shielded, With LED Thru Hole Type			UNIT 單位	mm inch
PART NO. 料 號	CWJ1400-S-B1L＊			SCALE 比 例	1 : 1
DRAWN BY 製 圖	Dylan	DATE 日 期	2015-10-16	REV. 版 本	A.0
CHECKED BY 審 核	Eason	DATE 日 期	2015-10-16		

2. PCB LAYOUT :

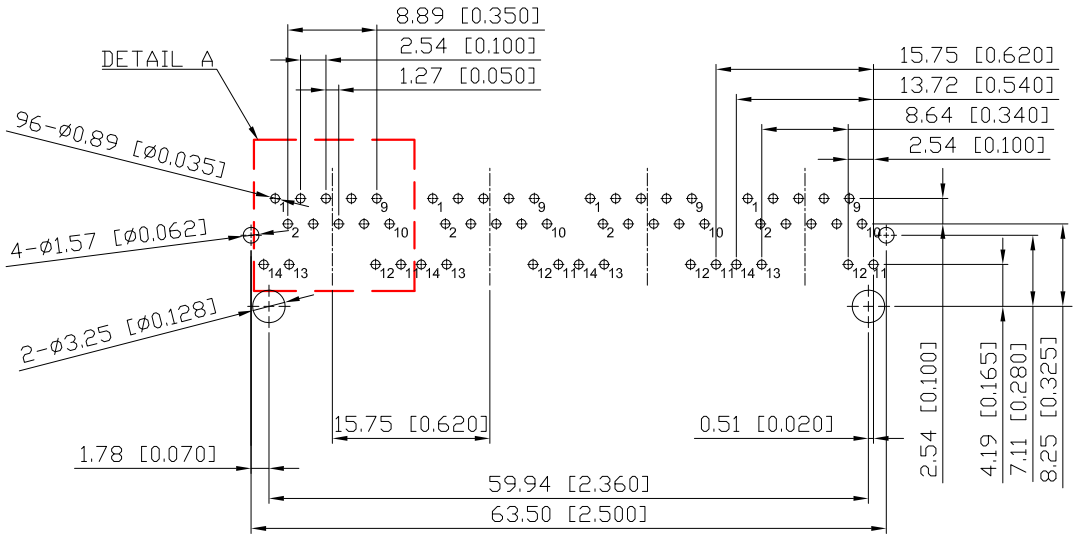

SUGGESTED PCB LAYOUT
(TOP VIEW)
DIMENSIONAL TOLERANCE: .XX ±0.08[0.003]

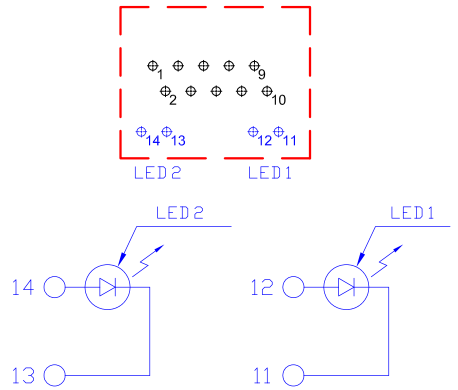

DETAIL A
(TOP VIEW)

CHAMPWAY 冠泰電子有限公司
CHAMPWAY ELECTRONICS CO., LTD.

ZONE	REV.	DESCRIPTION	DATE	DWG.

FILE NO : CWJ1400 SERIES

TOLERANCE(公差) :
0.00 mm ± 0.25 mm
0.0 mm ± 0.30 mm

TITLE 圖 名	1X4 RJ45, 10P10C, Shielded, With LED Thru Hole Type			UNIT 單位	mm inch
PART NO. 料 號	CWJ1400-S-B1L＊			SCALE 比 例	1 : 1
DRAWN BY 製 圖	Dylan	DATE 日 期	2015-10-16	REV. 版 本	A.0
CHECKED BY 審 核	Eason	DATE 日 期	2015-10-16		