ZONE	SYMBOL	REVISION	APPROVAL	DATE
		ADD MATE PLUG	J.X.KUANG	2-8-2006

RoHS Compliant

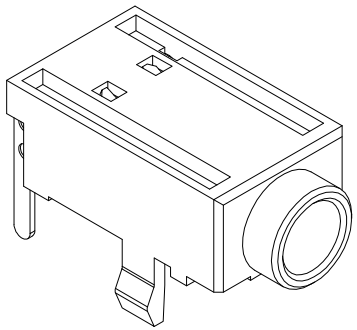

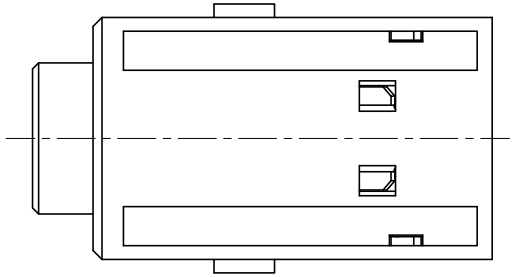

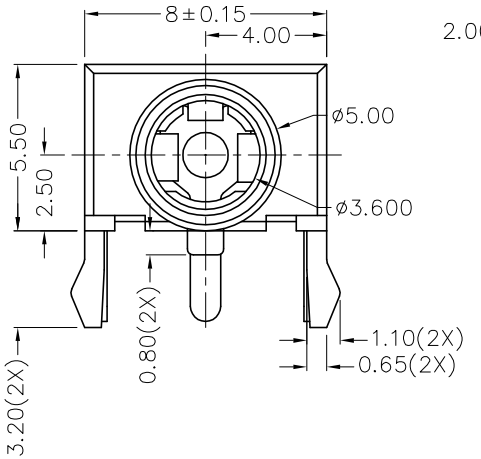

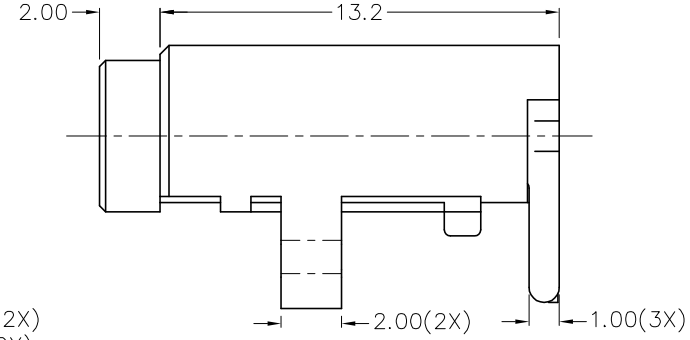

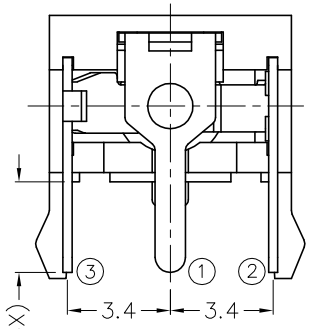

PCB THK.	A
1	8.2
1.2	8.4
1.6	8.8

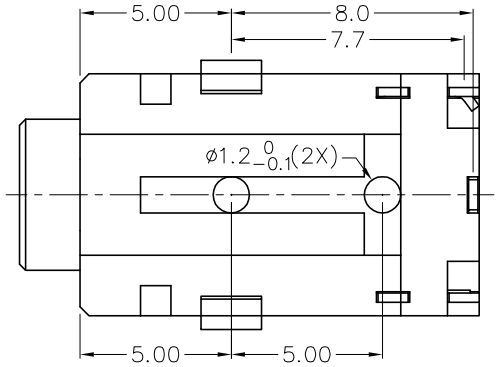

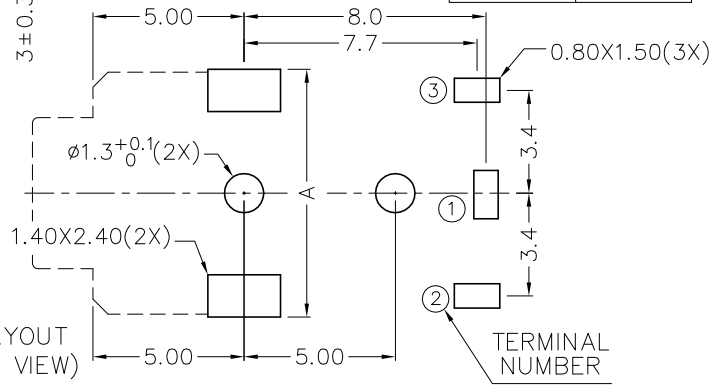

PCB LAYOUT (BOTTOM VIEW)

*MATERIAL

TERMINAL 1 : COPPER ALLOY
TERMINAL 2 : COPPER ALLOY
TERMINAL 3 : COPPER ALLOY
HOUSING : PBT

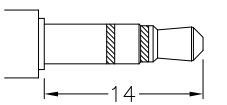

ø3.5 MATE PLUG

MODEL NO.	TSH-3793
SCHEMATIC	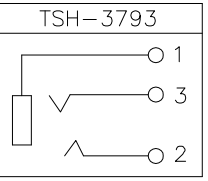

CHAMPWAY 冠泰電子有限公司
CHAMPWAY ELECTRONICS CO., LTD.

DESIGN	J.X.KUANG	DATE	7-10-2003	SCALE	4:1
DRAWING	T.Y.LI	DATE	2-8-2006	MATERIAL	*
CHECK		DATE		DWG. NO.	TZ\SH379-PBT/B
APPROVAL		DATE		SHEET	

PART NAME	3.5mm STEREO JACK	TOLERANCE UNLESS OTHERWISE SPECIFIED:	0.0±0.2 0.00±0.1 0.000±0.05
PART NO.	TSH-379	UNIT: mm	

DCF-04/A