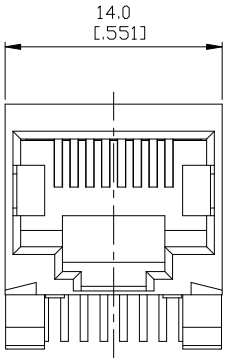


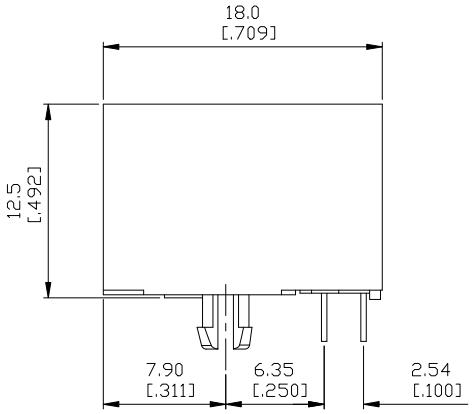


Electrical Characteristics :
Insulation Resistance : 500MΩ Min.
Contact Resistance : 50mΩ Max.
Withstand Voltage : 1000 VAC 1 minute.
Current Rating : 1.5A

Material:
Housing: Thermoplastic UL 94V-0
Contact : Selective Gold Plating
Terminal: 0.35mm Thickness Phosphor Bronze
Plated With Gold And Tin In Solder Area.
CUL File No : E215573

PART NO : 8 3 8 8 C - B ∗ 1

- Positions
- Contacts
- Housing Color
  B : Black
- Ports
- Gold Plated
  0 : Gold Flash
  1 : 6u"
  2 : 15u"
  3 : 30u"
  4 : 50u"

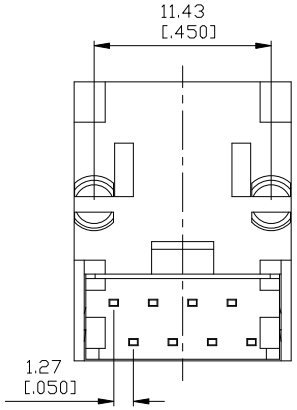


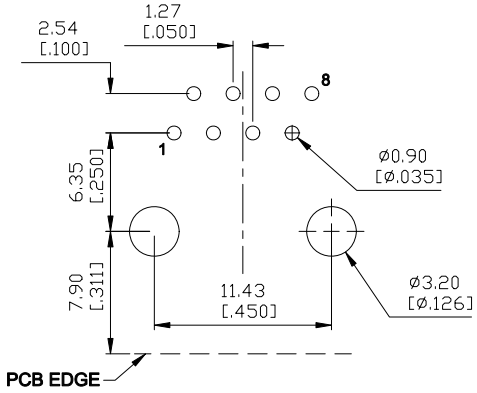


SUGGESTED PCB LAYOUT
TOP VIEW

CHAMPWAY 冠泰電子有限公司
CHAMPWAY ELECTRONICS CO., LTD.

| ZONE | REV. | DESCRIPTION | DATE | APPD. |
|---|---|---|---|---|
| Ⓐ | A.1 | Withstand Voltage 500修改為1000VAC | 2008-08-01 | Nick |
| Ⓑ | | | | |
| Ⓒ | | | | |
| Ⓓ | | | | |
| Ⓔ | | | | |

FILE NO : 83 (SERIES)

TOLERANCE(公差) :
0.000 mm ± 0.075 mm
0.00 mm ± 0.15 mm
0.0 mm ± 0.25 mm

| | | | | | |
|---|---|---|---|---|---|
| TITLE 圖 名 | RJ45 SIDE ENTRY PCB JACK | | | UNIT 單位 | mm inch |
| PART NO. 料 號 | 8388C-B∗1 | | | SCALE 比 例 | 1 : 1 |
| REV. 版 本 | A.1 | DATE 日 期 | 2007-07-17 | | |
| CHECKED BY 審 核 | Michael | DRAWN BY 製 圖 | Valiant | | |