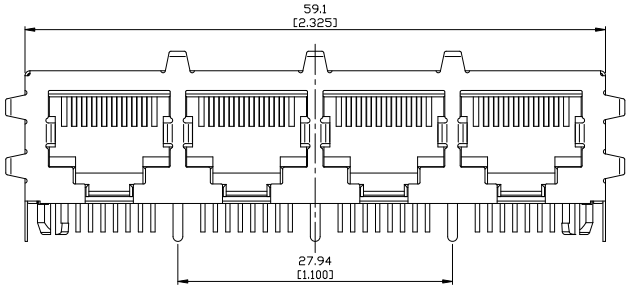


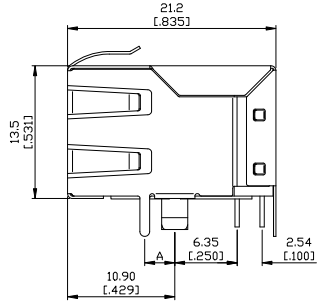


Electrical Characteristics :
Insulation Resistance : 500MΩ Min.
Contact Resistance : 30mΩ Max.
Withstand Voltage : 1000 VAC 1 minute.
Current Rating : 1.5A

Material:
Housing : Thermoplastic UL94V-0
Contact : Full Gold Plating
Spring Wire : Dia 0.45mm Phosphor Bronze
Optional Gold Plating Over Nickel
Shield : Brass, Nickel Plating.
CUL File No : E215573

PART NO : 8 2 0 8 S- B∗4∗- 3

Positions
Contacts
Panel Ground
Non : Non Panel Ground
U : Top With Panel Ground
D : 2 Sides With Panel Ground
S : 3 Sides With Panel Ground
Housing Color
B : Black
Gold Plated
0 : Gold Flash
1 : 6u"
2 : 15u"
3 : 30u"
4 : 50u"
Ports

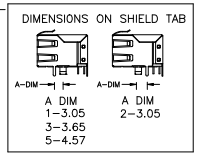


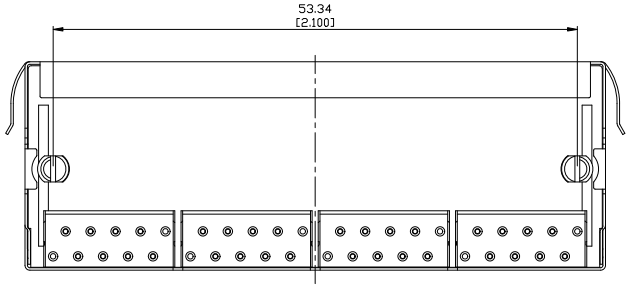


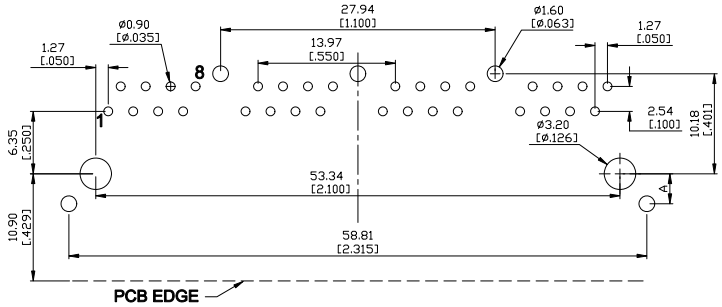


SUGGESTED PCB LAYOUT
TOP VIEW

CHAMPWAY 冠泰電子有限公司
CHAMPWAY ELECTRONICS CO., LTD.

| ZONE | REV. | DESCRIPTION | DATE | APPD. |
|---|---|---|---|---|
| Ⓐ | A.1 | Withstand Voltage 500修改為1000VAC | 2008-08-01 | Nick |
| Ⓑ | | | | |
| Ⓒ | | | | |
| Ⓓ | | | | |
| Ⓔ | | | | |

FILE NO : 82 (SERIES)

TOLERANCE (公差) :
0.000 mm ± 0.075 mm
0.00 mm ± 0.15 mm
0.0 mm ± 0.25 mm

| | | | | | |
|---|---|---|---|---|---|
| TITLE 圖 名 | SHIELDED RJ45 SIDE ENTRY PCB JACK | | | UNIT 單位 | mm inch |
| PART NO. 料 號 | 8208S-B∗4∗-3 | | | SCALE 比 例 | 1 : 1 |
| REV. 版 本 | A.1 | DATE 日 期 | 2007-01-17 | | |
| CHECKED BY 審 核 | Michael | | DRAWN BY 製 圖 | Valiant | |