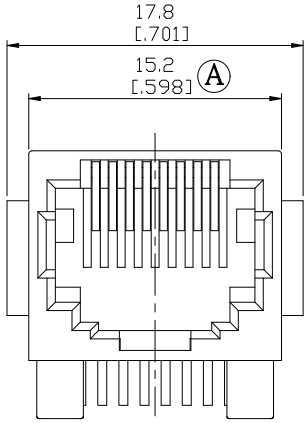

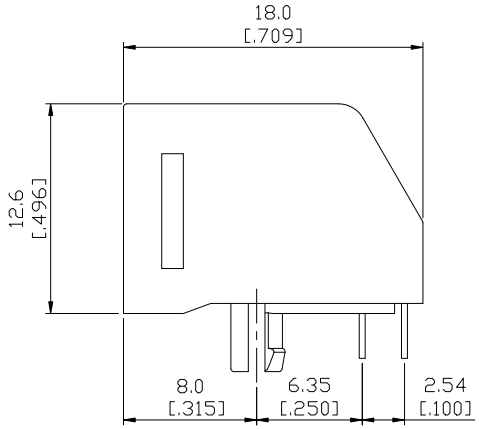

Electrical Characteristics :
Insulation Resistance : 500MΩ Min.
Contact Resistance : 50mΩ Max.
Withstand Voltage : 1000 VAC 1 minute.
Current Rating : 1.5A

Material:
Housing: Thermoplastic UL 94V-0
Contact : Selective Gold Plating
Terminal: 0.35mm Thickness Phosphor Bronze
Plated With Gold And Tin In Solder Area.
CUL File No : E215573

PART NO : 6 6 8 8 - B ∗ 1

Positions
Contacts
Housing Color
B : Black
Ports
Gold Plated
0 : Gold Flash
1 : 6u"
2 : 15u"
3 : 30u"
4 : 50u"

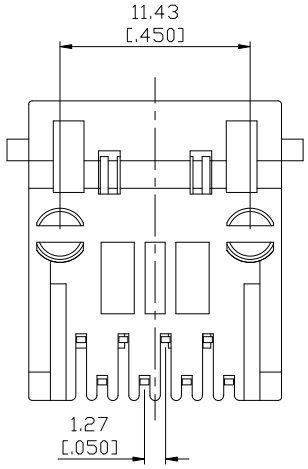

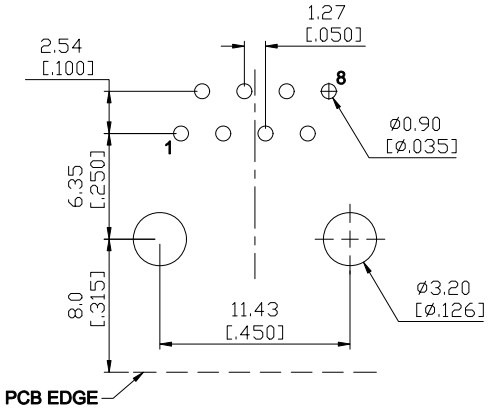

SUGGESTED PCB LAYOUT
TOP VIEW

CHAMPWAY 冠泰電子有限公司
CHAMPWAY ELECTRONICS CO., LTD.

ZONE	REV.	DESCRIPTION	DATE	APPD.
A	A.1	Withstand Voltage 500修改為1000VAC	2008-08-01	Nick
B				
C				
D				
E				

FILE NO : 66 (SERIES)

TOLERANCE(公差) :
0.000 mm ± 0.075 mm
0.00 mm ± 0.15 mm
0.0 mm ± 0.25 mm

TITLE 圖 名	NON-SHIELDED RJ45 SIDE ENTRY PCB JACK			UNIT 單位	mm inch
PART NO. 料 號	6688-B∗1			SCALE 比 例	1 : 1
REV. 版 本	A.1	DATE 日 期	2007-04-23		
CHECKED BY 審 核	Michael		DRAWN BY 製 圖	Valiant	