RevNo	Revision note	Date	Signature

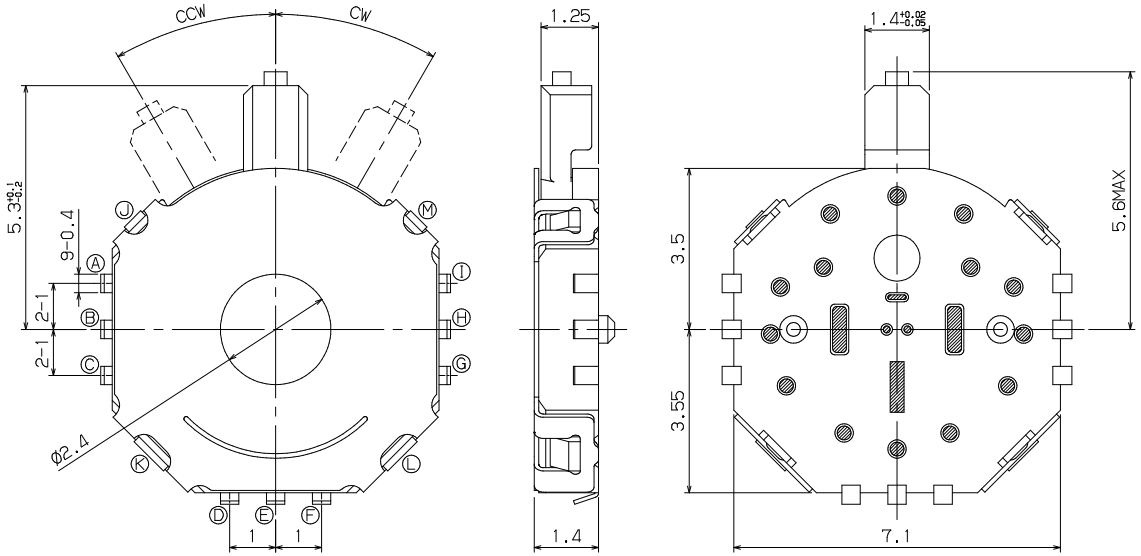

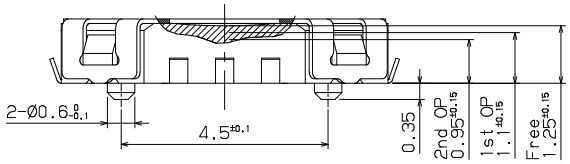

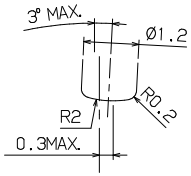

Push part conditions

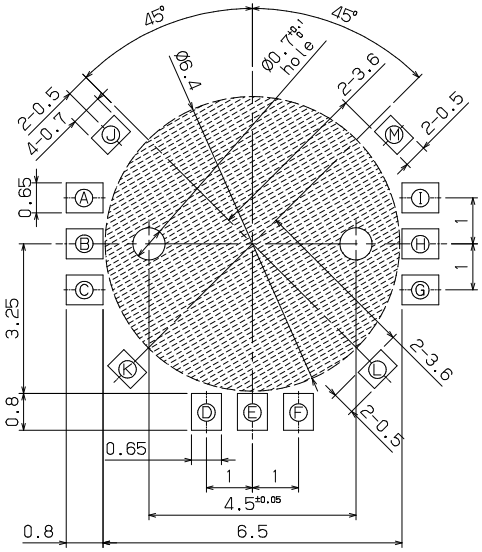

Appointed area of soldering

Prohibition area of exposing patterns

P.C.B LAND DIMENSION

NOTE

1. RATING : DC 5V 10mA
2. CONTACT RESISTANCE : 1mΩMAX
3. GENERAL TOLERANCE : +/- 0.2 mm
4. MANUFACTURING SPECIFCATION WOULD BE ACCORDANCE WITH WT0158
5. PART NO.(P/N.):

MFS3200AME - 014 R - R

3 Directions + Double Action

PACKING R=REEL

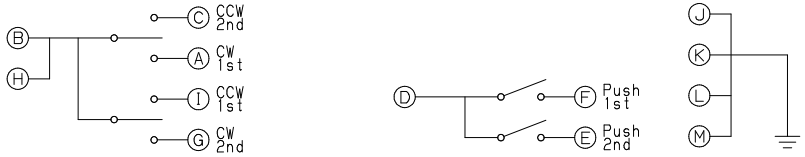

	2nd	1st	Center		1st	2nd
BH-G						▨
BH-A					▨	▨
BH-I	▨	▨				
BH-C	▨					
Angle	27°	20°	8°	0°	8°	20°	27°

▨ =ON CCW ⟷ CW

	Free	1st	2nd
D-F		▨	▨
D-E			▨

▨ =ON

CIRCUIT DIAGRAM

Rotational angle : 1st 8° ±3° , 2nd 20° ±3° , full Min.27°
Rotational torque : 5mN•m MAX.
Operating force (Push) : 1st 0.7±0.4N , 2nd 1.8±0.7N

NO.	PART NAME	QTY	REMARKS
9	COVER	1	C5210 Sn plated
8	PUSH BUTTON	1	PA
7	RETURN SPRING	1	SWP-B Ni plated
6	LEVER	1	PA
5	BRUSH CONTACT	1	C5210 Ag plated
4	CLICK PLATE	1	SUS
3	CONTACT BLADE	1	SUS Ag plated
2	TERMINAL	1	C5210 Ag plated
1	BASE MOLD	1	PA

Designed by	L.Y.D	CHAMPWAY 冠泰電子有限公司 CHAMPWAY ELECTRONICS CO., LTD.	
Checked by			
Approved by		Unit mm	Scale 1/1 / Date 2011.10.14
Item	Multi-Function Switch	Tool A-Cad	Sheet 1/1 / Rev. 0
Model	3 Directions + Double Actions	Drawing name	MFS3200AME-014R-R