RevNo	Revision note	Date	Signature

NOTE

1. RATING : DC 12V 50mA
2. CONTACT RESISTANCE : 100mΩMAX
3. GENERAL TOLERANCE : +/- 0.2 mm
4. MANUFACTURING SPECIFCATION WOULD BE ACCORDANCE WITH WT0158
5. PART NO.(P/N.):

TS302AME - □ * * R - R

- 3.0X6.0 SMD RIGHT ANGLE
- DIMENSION "H" □=3.5mm
- STEM COLOR □=BLACK
- OPERATING FORCE B=160gf C=260gf
- PACKING R=REEL

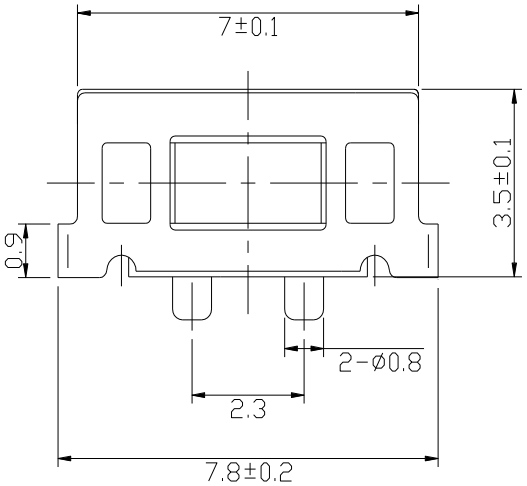

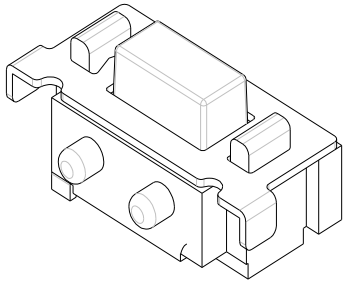

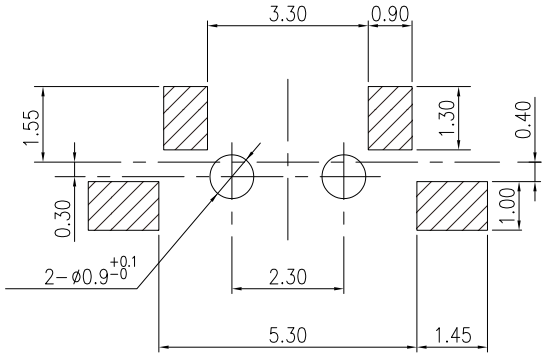

P.C.B LAND DIMENSION

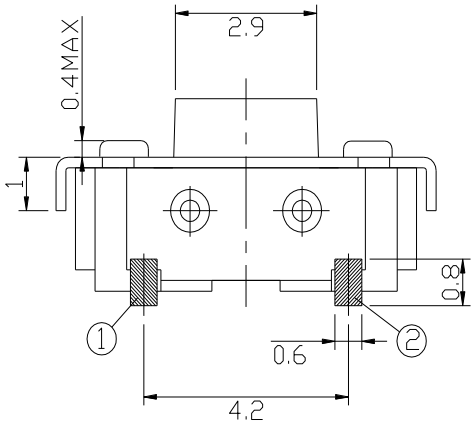

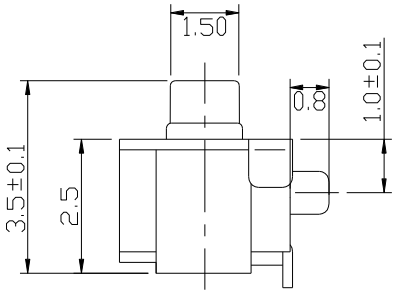

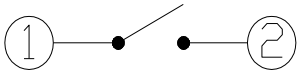

CIRCUIT DIAGRAM

Designed by L.Y.D		CHAMPWAY 冠泰電子有限公司 CHAMPWAY ELECTRONICS CO., LTD.	
Checked by			
Approved by	Unit mm	Scale 1/1	Date 2011.10.14
Item Tactile Switch	Tool A-Cad	Sheet 1/1	Rev. 0
Model 3X6 R/A SMD	Drawing name TS302AME-* *R-R		