RevNo	Revision note	Date	Signature

NOTE

1. RATING : DC 12V 50mA
2. CONTACT RESISTANCE : 100mΩMAX
3. GENERAL TOLERANCE : +/- 0.3 mm
4. MANUFACTURING SPECIFCATION
   WOULD BE ACCORDANCE WITH WT0158
5. PART NO.(P/N.):

TS400VMG - 015 * R - R

- TS400VMG: 3.3X3.3 VERTICAL
- 015: DIMENSION "H" 015=1.5mm
- *: OPERATING FORCE A=100gf B=160gf C=260gf
- R: PACKING R=REEL

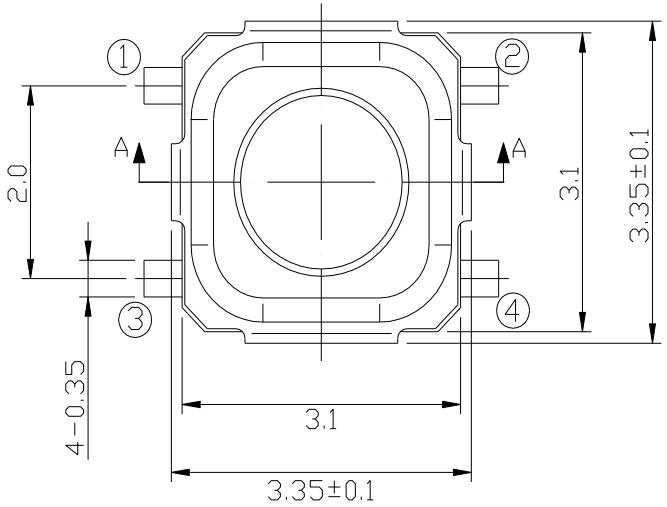

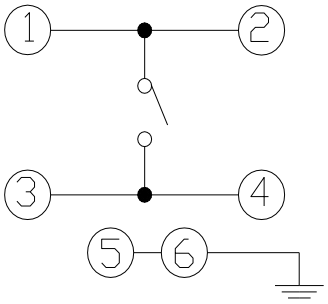

CIRCUIT DIAGRAM

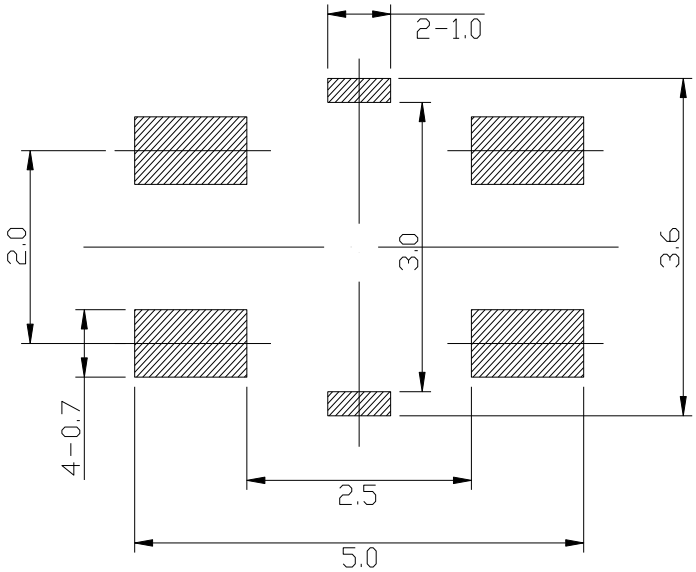

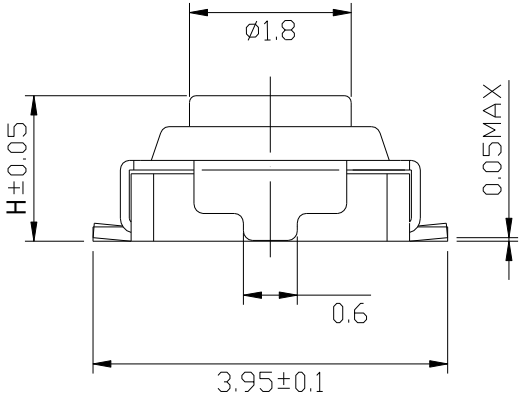

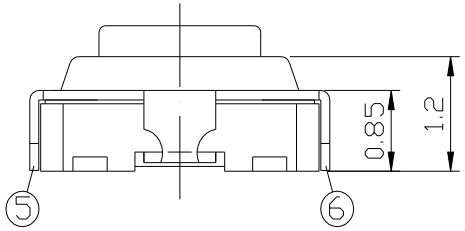

P.C.B LAND DIMENSION

Designed by L.Y.D		CHAMPWAY 冠泰電子有限公司 CHAMPWAY ELECTRONICS CO., LTD.	
Checked by			
Approved by	Unit mm	Scale 1/1	Date 2011.10.14
Item Tactile Switch	Tool A-Cad	Sheet 1/1	Rev. 0
Model 3.3X3.3X1.5 SMD	Drawing name TS400VMG-015 * R-R		